P3 Technologies
Propulsion. Pumps. Power.

Multi-Channel Diffuser (MCD)

The new standard in diffuser technology

Get the technology that pays for itself in less than one year

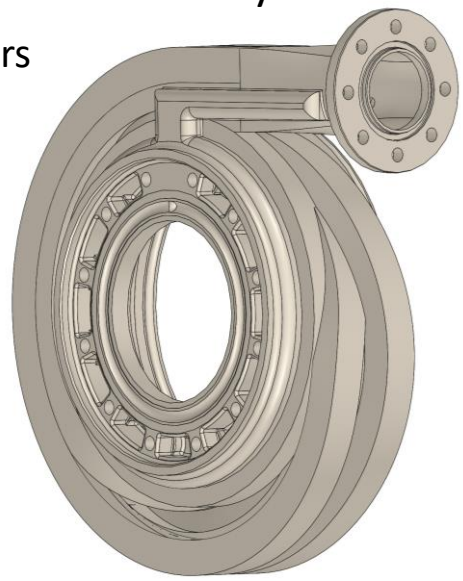

- Works with both Pumps and Compressors
- Easy to incorporate into new designs or retrofit into existing products
- 20% increase in discharge pressure, or
- 20% decrease in power consumption
- 50% increase in operating range
- Physically smaller
  - 15% smaller (more possible)
  - 25% lower weight
- Longer life
  - Order-of-magnitude lower stress
- Lower cost – a third the cost of comparable diffusers

Centrifugal Compressors for Turbine Engines

Turbochargers for Land or Air Vehicles

Water Pumps for Swimming Pools and Municipal Pumps

Pumps and Compressors for Industrial Chillers

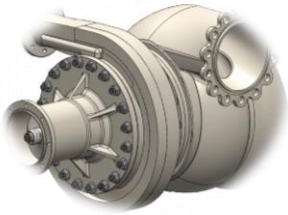

Turbopumps for Commercial and Government Launch

Reduces energy consumption billions of dollars annually and saves our environment from millions of tons of CO2 annually

www.p3-tech.com

Patent 10,683,873